CORDLESS ANGLE IMPACT DRIVER

Model 6940D
Model 6940DW

IMPORTANT! – To assure product SAFETY and RELIABILITY, repairs should be performed by MAKITA Service Centers or other qualified service organizations. Always use MAKITA replacement parts.

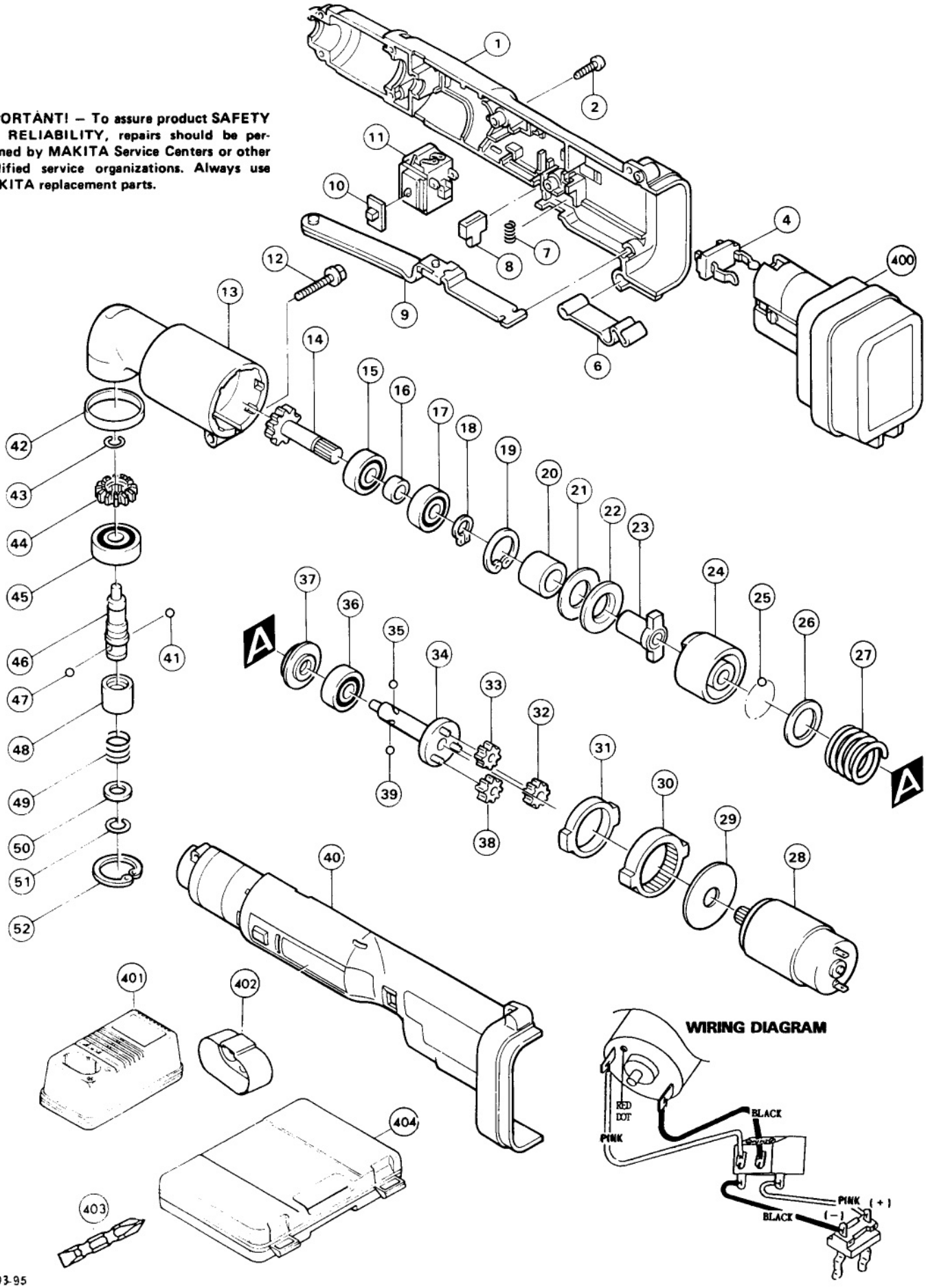

03-95

Fig.	Part No.	Qty. Used	Description
1	182659-6	1	HOUSING SET (Incl. Fig. 40)
2	265925-7	8	TAPPING SCREW BT4x20
4	643918-8	1	BATTERY HOLDER
6	344121-1	1	SET PLATE
7	231470-4	1	COMPRESSION SPRING 6
8	415500-1	1	SWITCH LEVER
9	158039-8	1	LEVER Cpl.
10	414740-8	1	LEVER
11	651909-5	1	SWITCH C3KE
12	265409-5	1	HEX BOLT M5x30
13	152461-1	1	ANGLE HEAD CPL.
14	226720-0	1	ZEROL BEVEL GEAR 13
15	211064-1	1	BALL BEARING 6000
16	257660-1	1	SLEEVE 10
17	211061-7	1	BALL BEARING 6000LLB
18	961006-2	1	RETAINING RING S-10
19	962105-3	1	RETAINING RING R-26
20	257662-7	1	SLEEVE 15
21	261095-0	1	RUBBER WASHER 21
22	267120-5	1	FLAT WASHER 15
23	322689-7	1	ANVIL
24	322688-9	1	HAMMER
25	216001-0	22	STEEL BALL 3.5
26	267121-3	1	FLAT WASHER 20
27	233107-9	1	COMPRESSION SPRING 22
28	629683-3	1	DC MOTOR 9.6V (Incl. 226235-7, Spur Gear 11)
29	267053-4	1	FLAT WASHER 12
30	226280-2	1	INTERNAL GEAR 69
31	257187-1	1	RING 32
32	226279-7	1	SPUR GEAR 29
33	226279-7	1	SPUR GEAR 29
34	154416-2	1	SPINDLE Cpl. (Incl. 3 ea. 256216-7, Pin 3)
35	216002-8	1	STEEL BALL 4.8
36	211064-1	1	BALL BEARING 6000
37	322719-4	1	WASHER 10
38	226279-7	1	SPUR GEAR 29
39	216002-8	1	STEEL BALL 4.8
40	182659-6	1	HOUSING SET (Incl. Fig 1)
41	216001-0	1	STEEL BALL 3.5
42	262062-8	1	RUBBER RING 31
43	231961-5	1	RING SPRING 9
44	226721-8	1	ZEROL BEVEL GEAR 13
45	211131-2	1	BALL BEARING 6001DDW
46	322714-4	1	SPINDLE
47	216001-0	1	STEEL BALL 3.5
48	322718-6	1	SLEEVE
49	233005-7	1	COMPRESSION SPRING 13
50	267085-1	1	FLAT WASHER 12
51	231951-8	1	RING SPRING 11
52	962116-8	1	RETAINING RING R-28
ACCESSORIES			
400	192019-4	1	BATTERY 9100
401	113103-2	1	CHARGER DC9700
402	414938-7	1	BATTERY COVER
403	784613-A	1	PHILLIPS/SLOTTED BIT
404	182439-A	1	PLASTIC CARRYING CASE